ECLIPSE

For AVID® S4 - 4ft base system

EG4-S4-4B-NN

GENERATION 4 Eclipse console system features a sonically diffusive silhouette that minimizes acoustical influence while retaining important features of a large format console in the critical listening environment.

Creature comforts include full length padded armrest, smooth fingerprint resistant writing surfaces, ample leg room and smart optional accessories.

Options and accessories include: Mahogany end panel trim, rail-mounted isolating speaker platforms, articulating monitor arms, off floor CPU, UPS mounting brackets, and more.

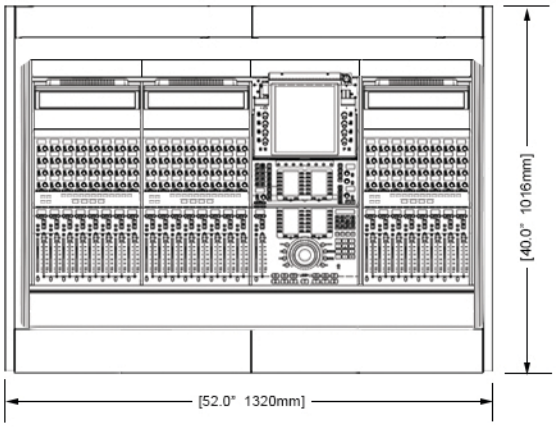

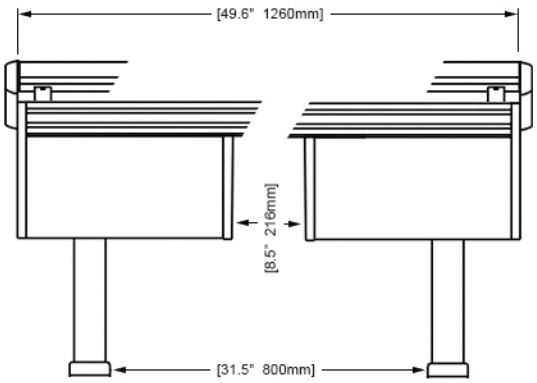

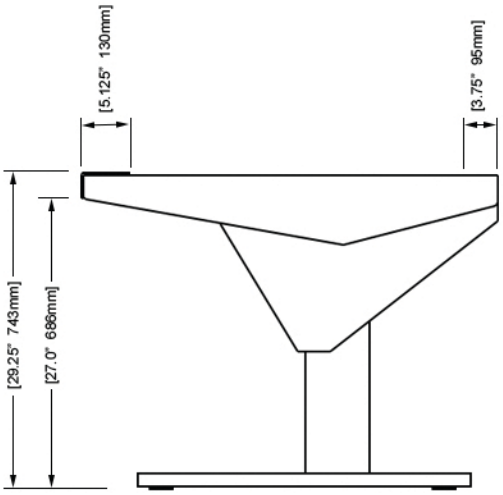

©2019 Argosy Console, Inc. All rights reserved. Specifications subject to change without notice.

v 1.0